The Cumulos™

Ceiling Fan

Net Weight 10.8 kg (23.8 lbs)

Model No. FP4820PW

OWNER'S MANUAL

READ AND SAVE THESE INSTRUCTIONS

FANIMATION®

celebrating 25 years

Important Safety Instructions

WARNING: To avoid fire, shock and serious personal injury, follow these instructions.

1. Read your owner's manual and safety information before installing your new fan. Review the accompanying assembly diagrams.
2. Before servicing or cleaning unit, switch power off at service panel and lock service panel disconnecting means to prevent power from being switched on accidentally. When the service disconnecting means cannot be locked, securely fasten a warning device, such as a tag, to the service panel.
3. Be careful of the fan and blades when cleaning, painting, or working near the fan. Always turn off the power to the ceiling fan before servicing.
4. Do not insert anything into the fan blades while the fan is operating.
5. Do not operate reversing switch until fan blades have come to a complete stop.
6. After making the wire connections, the wires should be spread apart with the grounded conductor and the equipment-grounding conductor on one side of the outlet box and the ungrounded conductor on the other side of the outlet box.

Additional Safety Instructions

1. To avoid possible shock, be sure electricity is turned off at the fuse box before wiring, and do not operate fan without blades.
2. All wiring and installation procedures must satisfy National Electrical Codes (ANSI/ NFPA 70-1999) and Local Codes. The ceiling fan must be grounded as a precaution against possible electrical shock. Electrical installation should be made or approved by a licensed electrician.
3. The fan base must be securely mounted and capable of reliably supporting at least 50 lbs. (fan and accessories not to exceed 50 lbs. or 22.7 kgs.). See page 4 of owner's manual for support requirements. Consult a qualified electrician if in doubt.
4. The fan must be mounted with the fan blades at least 7 feet from the floor to prevent accidental contact with the fan blades.
5. Follow the recommended instructions for the proper method of wiring your ceiling fan. If you do not have adequate electrical knowledge or experience, have your fan installed by licensed electrician.
6. Suitable for use with solid-state speed controls.

WARNING: To reduce the risk of fire or electric shock, this fan should only be used with Fan Speed Control Part No. UC7067RYL, manufactured by Rhine Electronic Co., Ltd.

WARNING: To Reduce The Risk Of Electrical Shock, This Fan Must Be Installed With A General Use, Isolating Wall Control/Switch.

WARNING: This product is designed to use only those parts supplied with this product and/or accessories designated specifically for use with this product. Using parts and/or accessories not designated for use with this product could result in personal injury or property damage.

WARNING: To reduce the risk of personal injury, do not bend the blade bracket (flange or blade holder) when installing the brackets, balancing the blades, or cleaning the fan. Do not insert foreign objects in between rotating fan blades.

LIMITED LIFETIME WARRANTY

Extends to the original purchaser of a Fanimation Fan

1. LIMITED LIFETIME MOTOR WARRANTY - If any part of your fan motor fails, due to a defect in materials or workmanship during the lifetime of the original purchaser, Fanimation will provide the replacement part free of charge, when the defective fan is returned to our national service center. Proof of purchase is required. Customer shall be responsible for all costs incurred in the removal or reinstallation and shipping of the product for repairs or replacement.
2. ONE YEAR MOTOR LABOR WARRANTY - If your fan motor fails at any time within one year from the original purchase, due to defects in materials or workmanship, labor to repair the motor will be provided free of charge at our national service center. Purchaser will be responsible for labor charges after this one-year period. Customer shall be responsible for all costs incurred in the removal or reinstallation and shipping of the product for repairs or replacement.
3. If any other part of your fan fails at any time within one year after original purchase, due to a defect in materials or workmanship, we will repair, or replace, at our option, the defective part free of charge for parts and labor performed at our national service center.
4. Because of varying climate conditions, this warranty does not cover changes in the finish, including rusting, pitting, corroding, tarnishing, or peeling.
5. This warranty is void and does not apply to damage from improper installation, neglect, accident, misuse, exposure to extremes of heat or humidity, or as a result of any modification to the original product.
6. All costs of removal and reinstallation of the fan are the sole responsibility of the owner of the fan and not the store that sold the fan or Fanimation.
7. Fanimation reserves the right to modify or discontinue any product at any time and may substitute any part under this warranty.
8. Under no circumstances may a fan be returned without prior authorization from Fanimation. The receipt of purchase must accompany authorized returns and must be sent freight prepaid to Fanimation. The fan to be returned must be properly packed to avoid damage in transit; Fanimation will not be responsible for any damage resulting from improper packaging.
9. It is understood that any repair or replacement is the exclusive remedy available from Fanimation. There is no other expressed or implied warranty. Fanimation hereby disclaims any and all implied warranties, including, but not limited to those of merchantability and fitness for a particular purpose to the extent permitted by law. Some states do not allow limitations on implied warranties. Fanimation will not be liable for incidental, consequential, or special damages arising out of or in conjunction with product use or performance, except as may otherwise be accorded by law. This warranty gives you special legal rights and you may also have other rights that vary from state to state.
10. A certain amount of wobble is normal and should not be considered a problem or a defect.

Table of Contents

Unpacking Instructions 3
Electrical and Structural Requirements 4
How to Assemble Your Ceiling Fan 4
How to Hang Your Ceiling Fan 6
How to Wire Your Ceiling Fan - C24 Remote Control 7
Installing the Canopy Housing 8
Operating Instructions - C24 Remote Control 8
Maintenance 8
Replacing Light Bulbs 9
Trouble Shooting 9
Parts List 10
Exploded-View Illustration 11

This Manual is Designed to Make it as Easy as Possible for You to Assemble, Install, Operate, and Maintain Your Ceiling Fan

Tools Needed for Assembly

- One Phillips head screwdriver
- One stepladder
- One ¼″ blade screwdriver
- One wire stripper
- Three wire connectors (supplied)

⚠ WARNING

Before assembling your ceiling fan, refer to section on proper method of wiring your fan (page 4). If you feel you do not have enough wiring knowledge or experience, have your fan installed by a licensed electrician.

Materials

Wiring outlet box and box connectors must be of type required by local code. The minimum wire would be a 3-conductor (2-wire with ground) of the following size:

Installed Wire Length	Wire Size A.W.G.
Up to 50 ft.	14
50 - 100 ft.	12

NOTE: *Place the parts from the loose parts bags in a small container to keep them from being lost. If any parts are missing, contact your local retailer.*

Unpacking Instructions

For your convenience, check-off each step. As each step is completed, place a check mark. This will ensure that all steps have been completed and will be helpful in finding your place should you be interrupted.

⚠ WARNING

Do not install or use fan if any part is damaged or missing. This product is designed to use only those parts supplied with this product and/or any accessories designated specifically for use with this product by Fanimation. Substitution of parts or accessories not designated for use with this product by Fanimation could result in personal injury or property damage. Contact your retail store for missing or damaged parts.

1. Check to see that you have received the following parts:

NOTE: *If you are uncertain of part description, refer to exploded view illustration. (Figure 1, page 13)*

- Fan Motor / Lights Assembly
- Hanger Bracket with shoulder screws (2)
- Downrod/Hanger Ball Assembly
- Ceiling Canopy
- Canopy Screw Cover
- Motor Coupling Cover
- Cable Support Arm (3)
- Cable Hanger Assembly (3)
- C24 Remote Control
- Receiver Unit
- Gu10 Light Bulbs (6)
- Hardware bags:
  - Phillips screwdriver, 4″
  - 5/32″ x 32-10mm flat-head screw (7)
  - Flat washer
  - Lag bolt
  - Four wire connectors
  - Ceiling Support Cable with clamp

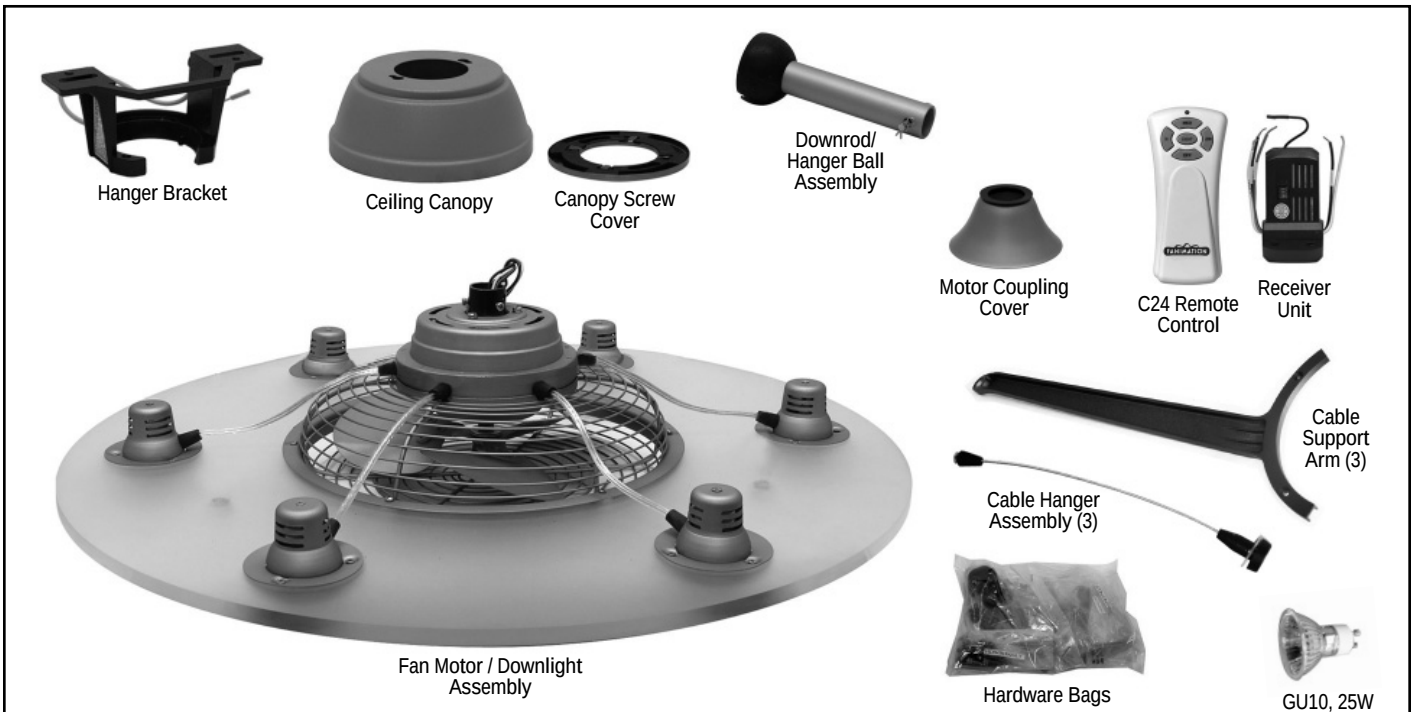

NOTE: *The illustration shown is not to scale or its actual part configuration or finish may vary*

Electrical and Structural Requirements

Your new ceiling fan will require a grounded electrical supply line of 120 volts AC, 60 Hz, 15 amp circuit. The outlet box must be securely anchored and capable of withstanding a load of at least 50 lbs. **Figure 1** depicts different structural configurations that may be used for mounting the outlet box.

⚠ WARNING

To reduce the risk of fire, electrical shock, or personal injury, mount fan to outlet box marked acceptable for fan support. Use screws supplied with outlet box. Most outlet boxes commonly used for support of light fixtures are not acceptable for fan support and may need to be replaced. Consult a qualified electrician if in doubt.

⚠ WARNING

Turning off wall switch is not sufficent. To avoid possible electrical shock, be sure electricity is turned off at the main fuse box before wiring. All wiring must be in accordance with National and Local codes and the ceiling fan must be properly grounded as a precaution against possible electrical shock.

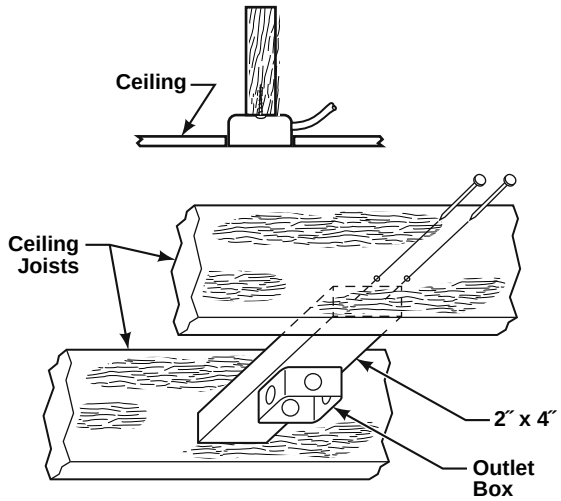

Figure 1

⚠ WARNING

To avoid fire or shock, follow all wiring instructions carefully. Any electrical work not described in these instructions should be done or approved by a licensed electrician.

How to Assemble Your Ceiling Fan

1. Assemble Cable Support Arms (3) on top of fan motor with screws (2 per arm) provided. (Figure 1)

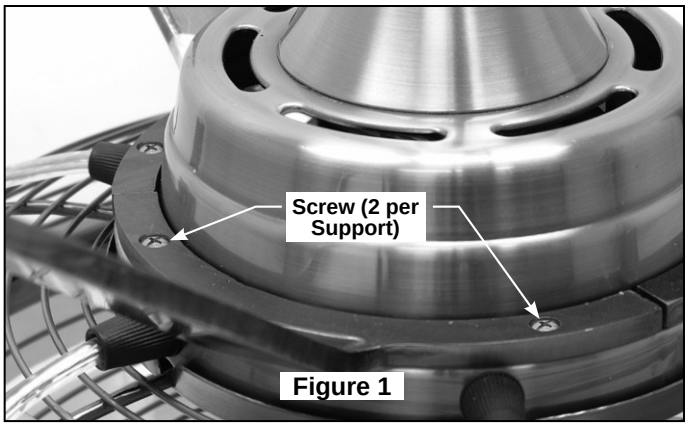

Figure 1

2. Route the top of Cable Hanger through each hole on underside of the acrylic disc. (Figures 2 & 3)

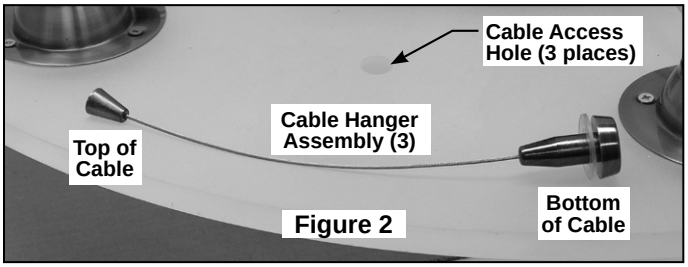

Figure 2

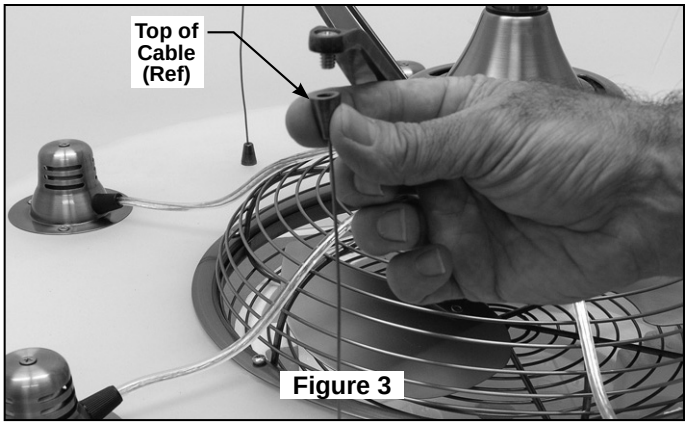

Figure 3

3. Fasten Cable Hanger to Support Arm with screw provided, 3 places. (Figure 3)

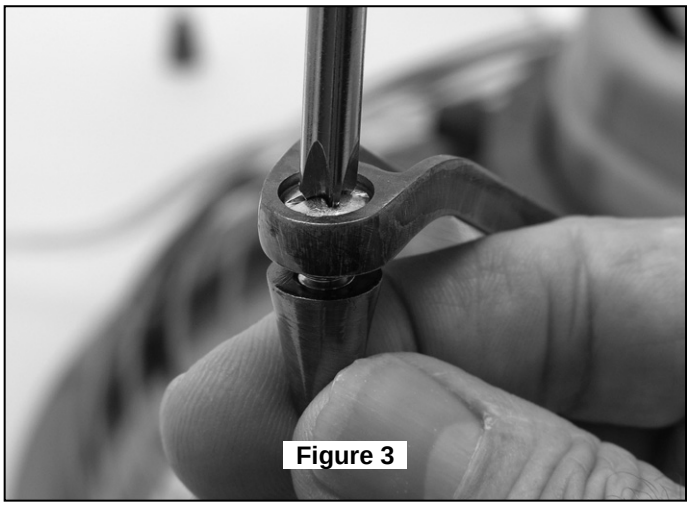

Figure 3

4. Remove the Hanger Ball by loosening the setscrew in the Hanger Ball until the ball falls freely down the Downrod. (Figure 4) Remove the Pin from the Downrod, then remove the Hanger Ball. Retain the Pin and Hanger Ball for reinstallation in Step 8.

5. The fan comes with blue, black, white 80˝ wires and support cable. Separate and untwist the three wires and support cable. Route the wires through the Downrod.

NOTE: *You will be using either the 6˝ or the optional downrod purchased separately.*

6. Loosen the three setscrews in the Downrod Support. Align the Clevis Pin holes in the Downrod with the holes in the Downrod Support. Install the Clevis Pin and secure with the Hairpin Clip. (Figure 5) Be sure to push the straight leg of the hairpin clip through the hole near the end of the clevis pin until the curved portion of the hairpin clip snaps around the clevis pin. The hairpin clip must be properly installed to prevent the clevis pin from working loose. Pull on the Downrod to make sure the clevis pin is properly installed.

7. Route wires and support cable through Motor Coupling Cover and through opening in Canopy Screw Cover and Canopy. Position Canopy Screw Cover and Canopy on fan shown with open side facing up. (Figure 6)

8. Reinstall the Hanger Ball (Figure 4) on the Downrod as follows. Route the three 80˝ wires and support cable through the Hanger Ball. Position the Pin through the two holes in the Downrod and align the Hanger Ball so the Pin is captured in the groove in the top of the Hanger Ball. Pull the Hanger Ball up tight against the pin. **Securely tighten the setscrew in the Hanger Ball. A loose setscrew could create fan wobble.**

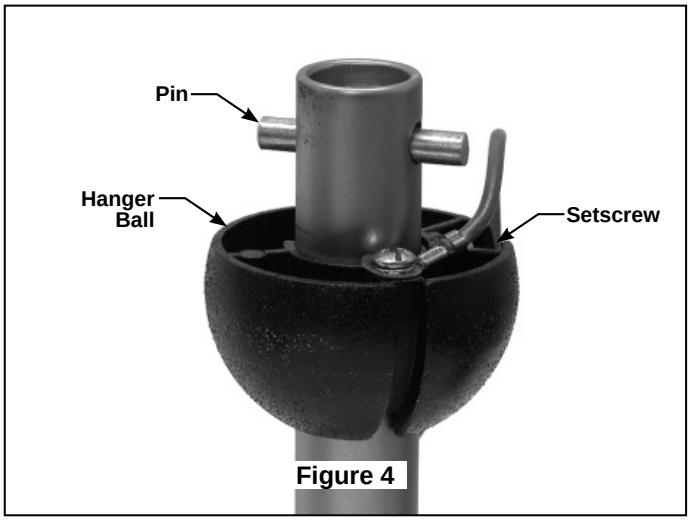

Figure 4

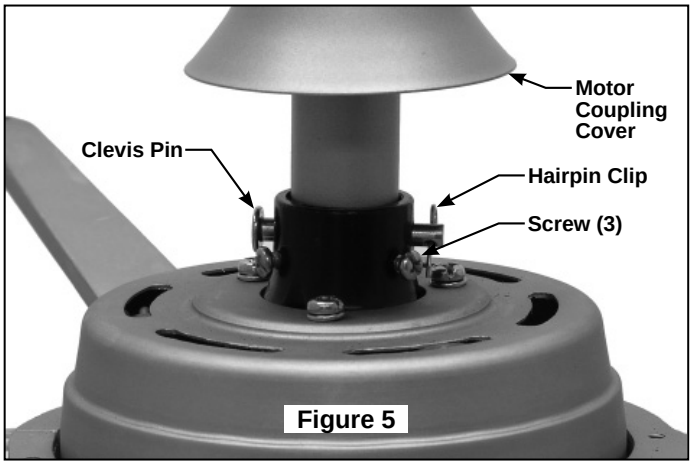

Figure 5

⚠ WARNING

It is critical that the clevis pin in the downrod support is properly installed and the setscrews are securely tightened. Failure to verify that the pin and setscrews are properly installed could result in the fan falling.

How to Assemble Your Ceiling Fan (cont'd)

9. While pulling up on the hanger ball, securely tighten the three setscrews in the downrod support. (Figure 5)

NOTE: *The setscrews must be properly installed as described above, or fan-wobble could result.*

10. Slide the Motor Coupling Cover down until it touches the top of the Housing. (Figure 6)

11. Before installing fan, measure up approximately 6-9 inches above top of Downrod/Hanger Ball Assembly. Cut off excess wire and strip back insulation ½″ from end of wire.

12. You have now completed the assembly of your ceiling fan. You can now proceed with the hanging and the electrical wiring of your fan.

NOTE: *All set screws must be checked and re-tightened where necessary before installation. (See Maintenance, page 8)*

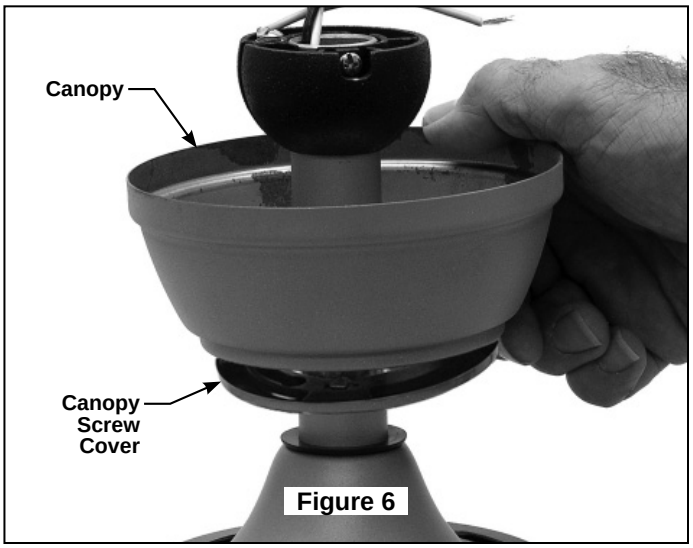

Figure 6

How to Hang Your Ceiling Fan

⚠ WARNING

To avoid possible electrical shock, be sure electricity is turned off at the main fuse box before hanging.
NOTE: If you are not sure if the outlet box is grounded, contact a licensed electrician for advice, as it must be grounded for safe operation.

⚠ WARNING

The fan must be hung with at least 7′ of clearance from floor to blades (Figure 1)

⚠ WARNING

The outlet box must be securely anchored to building structure and capable of withstanding a load of at least 50 lbs. Hanger bracket must seat firmly against outlet box. If the outlet box is recessed, remove wallboard until bracket contacts box. If bracket and/or outlet box are not securely attached, the fan could wobble or fall.

1. Using the ⅜″ x 2″ lag bolt and flat washer, attach safety cable to ceiling joist or wood structural member. The lag bolt will pass through the flat washer, safety cable loop, and into the building structure (Figure 2). You will first drill a ¼″ pilot hole into the building structure to prevent splitting or cracking.

2. Using two #8-32 screws, mount the hanger bracket to ceiling junction box **acceptable for ceiling support**.

NOTE: *Ceiling support cable must be fastened between flat washer and ceiling member (Figure 2).*

3. Make sure the electrical supply wires, including the hanger bracket grounding wire and safety cable are pulled through the downrod, between the hanger bracket and the junction box so that electrical connections can be made later.

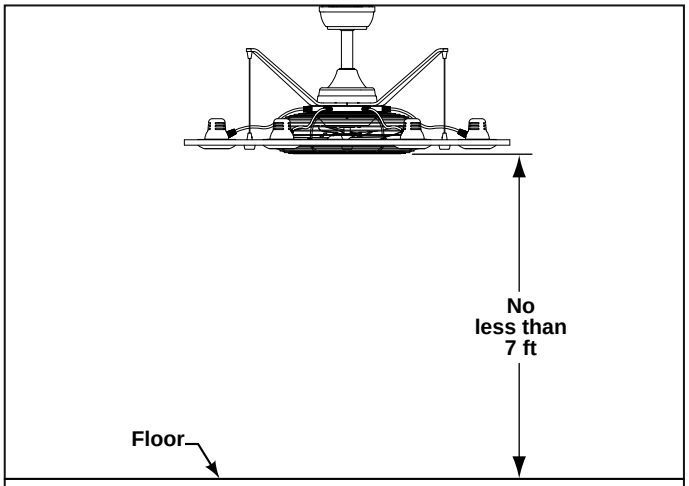

Figure 1

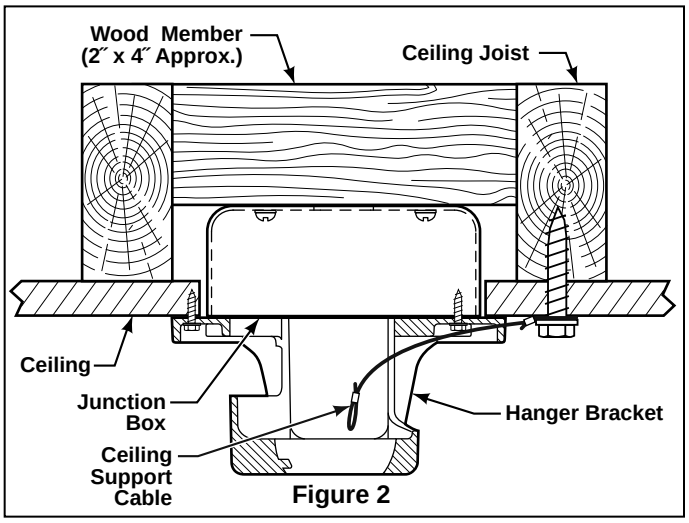

Figure 2

How to Hang Your Ceiling Fan (cont'd)

4. Carefully lift the fan and seat the downrod/hanger ball assembly on the hanger bracket that was just attached to the ceiling joist. Be sure the groove in the ball is lined up with tab on the hanger bracket. (Figure 3)

5. Attach the safety cable to ceiling support cable. Slide cable clamp onto safety cable (from fan). Place the end of cable through the loop of ceiling support cable. Pull as much cable through loop as possible. Feed end of cable into clamp hole and firmly tighten screw (Figure 3). Cut off excess safety cable.

⚠ WARNING

Failure to seat tab in groove could cause damage to electrical wires and possible shock or fire hazard.

⚠ WARNING

To avoid possible shock, do not pinch wires between the downrod/hanger ball assembly and the hanger bracket.

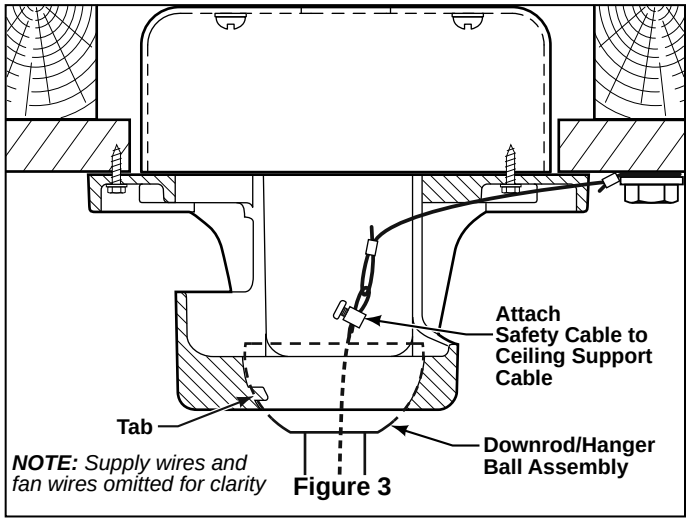

Figure 3

How to Wire Your Ceiling Fan – C24 Remote Control

If you feel that you do not have enough electrical wiring knowledge or experience, have your fan installed by a licensed electrician.

⚠ WARNING

To avoid possible electrical shock, be sure electricity is turned off at the main fuse box before wiring.
NOTE: If you are not sure if the outlet box is grounded, contact a licensed electrician for advice, as it must be grounded for safe operation.

1. Setting the Code: The remote unit has 16 different code combinations. To prevent possible interference from or to other remote units such as garage door openers, car alarm or security systems, simply change the combination code in your transmitter and receiver. To set the code, perform these steps.

• **Transmitter:** remove battery cover. Press firmly below arrow and slide battery cover off. Slide code switches to your choice of up or down position. Factory setting is all up. Do not use this position. With a small screwdriver or ball point pen slide firmly up or down (Figure 1a). Replace battery cover on the transmitter.

• **Receiver:** Slide code switches to the same positions as set on your transmitter (Figure 1b).

2. Installing Receiver in Hanger Bracket:

• Slide Receiver Unit into the Hanger Bracket (Fig 2).

• Connect wires as indicated: (Figure 3)

– Green Hanger Bracket and Hanger Ball wires to BARE (ground) wire.

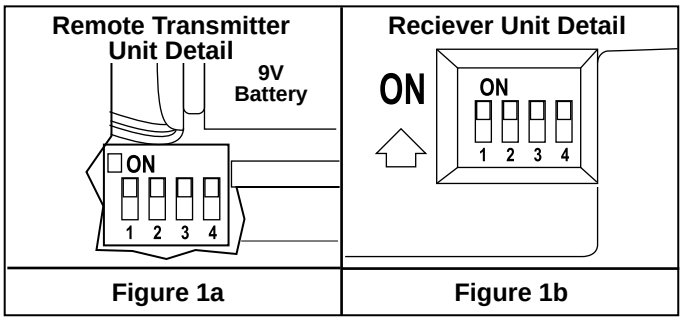

Figure 1a | Figure 1b

NOTE: *If fan or supply wires are different colors than indicated, have this unit installed by a qualified electrician.*

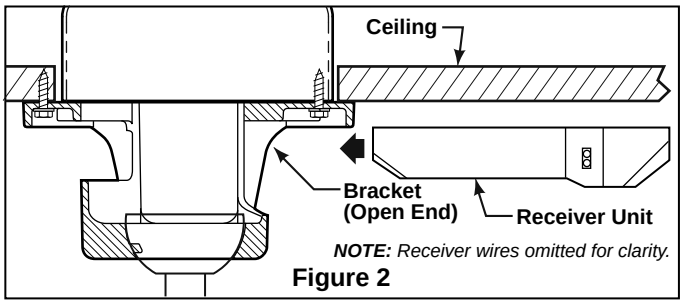

Figure 2

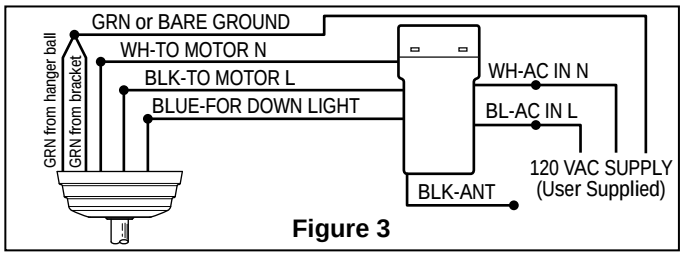

Figure 3

– BLACK Receiver Unit wire (AC IN L) to BLACK supply wire.

– WHITE Receiver Unit wire (AC IN N). to WHITE supply wire.

– WHITE Receiver Unit wire (TO MOTOR N) to WHITE fan wire.

– BLACK Receiver Unit wire (TO MOTOR L) to BLACK fan wire.

– BLUE Receiver Unit wire (FOR DOWN LIGHT) to BLUE light wire.

• Position all connected wires and receiver antenna to allow installation of ceiling canopy.

• To install ceiling canopy, see page 8.

3. Instructions for supply connections: conductor of a fan identified as grounded conductor to be connected to a grounded conductor of power supply, conductor of fan identified as ungrounded conductor to be connected to an ungrounded conductor of power supply, conductor of fan identified for equipment grounding to be connected to an equipment-grounding conductor.

Installing the Canopy Housing

NOTE: *This step is applicable* ***after*** *the necessary wiring is completed.*

⚠ WARNING

To avoid possible fire or shock, make sure that the spliced electrical wires are turned upward and completely pushed carefully up into the junction box and not pinched between the housing and the ceiling.

1. Loosen the two shoulder screws in the Hanger Bracket with a screwdriver (Figure 1a).

2. Securely attach the Canopy Housing over the shoulder screws (Figure 1b).

3. Securely attach and tighten the Canopy Screw Cover over the shoulder screws in the Hanger Bracket utilizing the keyslot twist-lock feature (Figure 1b).

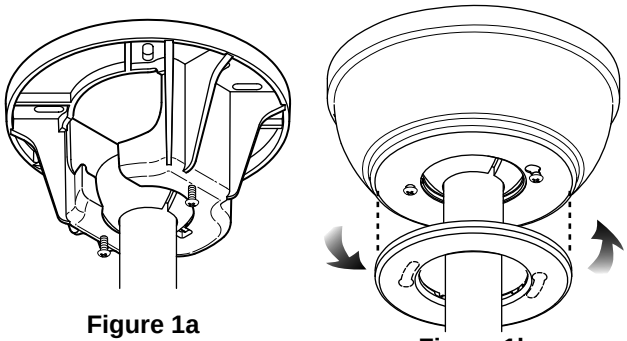

Figure 1a **Figure 1b**

Operating Instructions – C24 Remote Control

⚠ WARNING

Check to see that all connections are tight, including ground, and that no bare wire is visible at the wire connectors, except for the ground wire.

1. Operating & Using Remote Transmitter (Figure 3): Install 9 volt battery (If not using for long periods of time, remove battery to prevent damage to transmitter). Store the transmitter away from excess heat or humidity.

- HI Push Button – high fan speed
- MED Push Button – medium fan speed
- LOW Push Button – low fan speed
- OFF Push Button – fan off
- Light Push Button – on/off, hold for infinite light level

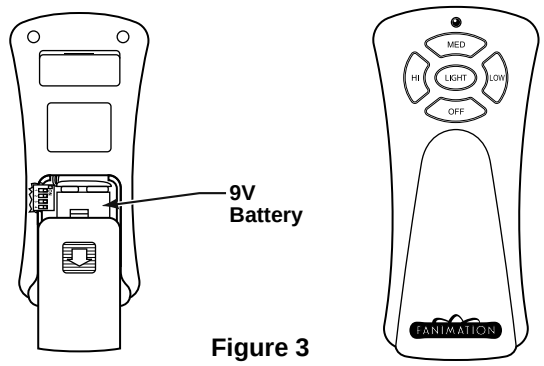

Figure 3

Maintenance

Periodic cleaning of your new ceiling fan is the only maintenance that is needed.
When cleaning, use only a soft brush or lint free cloth to avoid scratching the finish.
Abrasive cleaning agents are not required and should be avoided to prevent damage to finish.

CAUTION

Do not use water when cleaning your ceiling fan. It could damage the motor or the finish and create the possibility of electrical shock.

RECOMMENDED: **Periodically check that the fan motor, support arms screws, downrod support housing and light kit screws are tight and secure.**

Replacing Light Bulbs

CAUTION

To avoid possible electrical shock, be sure electricity is turned off before installing Light Bulbs.

⚠ WARNING

To prevent over-heating or electrical fires, use ONLY 120 volt–25 watt, GU10 halogen bulbs as specified.

1. Turn off power.

2. Remove burned-out bulb(s). By gently pressing upward on the bulb, twisting counter-clockwise and pulling out the bulb. (Figure 1).

3. Firmly seat the new bulbs in their sockets. By aligning pins with slots in socket, gently pressing upward and twisting clockwise to seat the bulb.

4. Restore power.

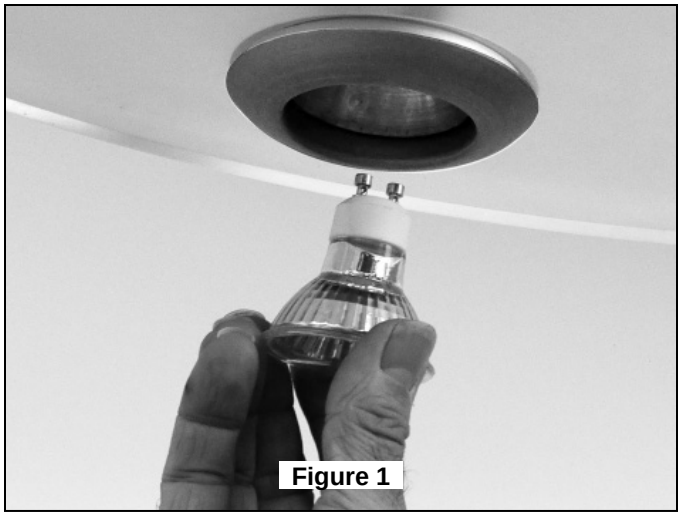

Figure 1

To Order Replacement Bulbs

Contact your retail store and ask for GU10, 25W bulb.

Trouble Shooting

⚠ WARNING

For your own safety TURN OFF power at fuse box or circuit breaker before trouble shooting your fan.

Trouble	Probable Cause	Suggested Remedy
1. FAN WILL NOT START	**1.** Fuse or circuit breaker blown. **2.** Loose power line connections to the fan, or loose switch wire connections in the switch housing. **3.** Dead battery in remote control.	**1.** Check main and branch circuit fuses or circuit breakers. **2.** Check line wire connections to fan and switch wire connections in the switch housings. **CAUTION: Make sure main power is turned off !** **3.** Replace with fresh battery.
2. FAN SOUNDS NOISY	**1.** Motor noise caused by solid state variable speed control.	**1.** Some fan motors are sensitive to signals from solid-state variable speed controls. Solid-state controls are not recommended, choose an alternative control method.
3. FAN WOBBLES EXCESSIVELY	**1.** Setscrew in downrod support is loose. **2.** Setscrew in downrod/hanger ball assembly is loose. **3.** Hanger bracket and/or ceiling outlet box is not securely fastened.	**1.** Tighten both setscrews securely in downrod support. **2.** Tighten the setscrew in the downrod/hanger ball assembly. **3.** Tighten the hanger bracket screws to the outlet box, and secure outlet box.
4. NOT ENOUGH AIR MOVEMENT		**1.** If possible, consider using a longer downrod. For example, use a 12” downrod instead of the 6” downrod that comes with your fan.

Parts List

Model #FP4820PW

Ref. #	Description	Part #
1	Hanger Bracket Assembly with Shoulder Screws (2)	APGQM410R
2	*Downrod/Hanger Ball Assembly Containing:*	ADRQM1-6PW
2a	Hanger Ball Assembly	
2b	Downrod	
2c	Hairpin Clip	
2d	Clevis Pin	
3	Ceiling Canopy	PGQM1001
3a	Canopy Screw Cover	APPQM1101
4	Motor Coupling Cover	APPQM1401PW
5	Fan Motor / Light Disc Assembly	AMA4820PW
6	Cable Support Arm (3)	P482033PW
7	Cable Hanger Assembly (3)	AP482035
8	GU10 Bulb (6) - 25 watts	
9	Receiver Unit	RECAN15
10	Remote Control	C24
11	*Hardware Bag Containing:*	HDWFP4820PW
	4” Phillips Screwdriver	
	5/32” x 32-10 mm Flat-Head Screws (7)	
	Wire Connectors (4)	
	Support Cable Bag Containing:	
	Ceiling Support Cable	
	Cable Clamp	
	Flat Washer	
	Lag Bolt, 3/8“ x 2”	

Before discarding packaging materials, be certain all parts have been removed

How To Order Parts

Contact your retail store for repair parts. When ordering repair parts, always give the following information.

- Part Number
- Part Description
- Fan Model Number

The Cumulos™ FP4820PW
Exploded-View

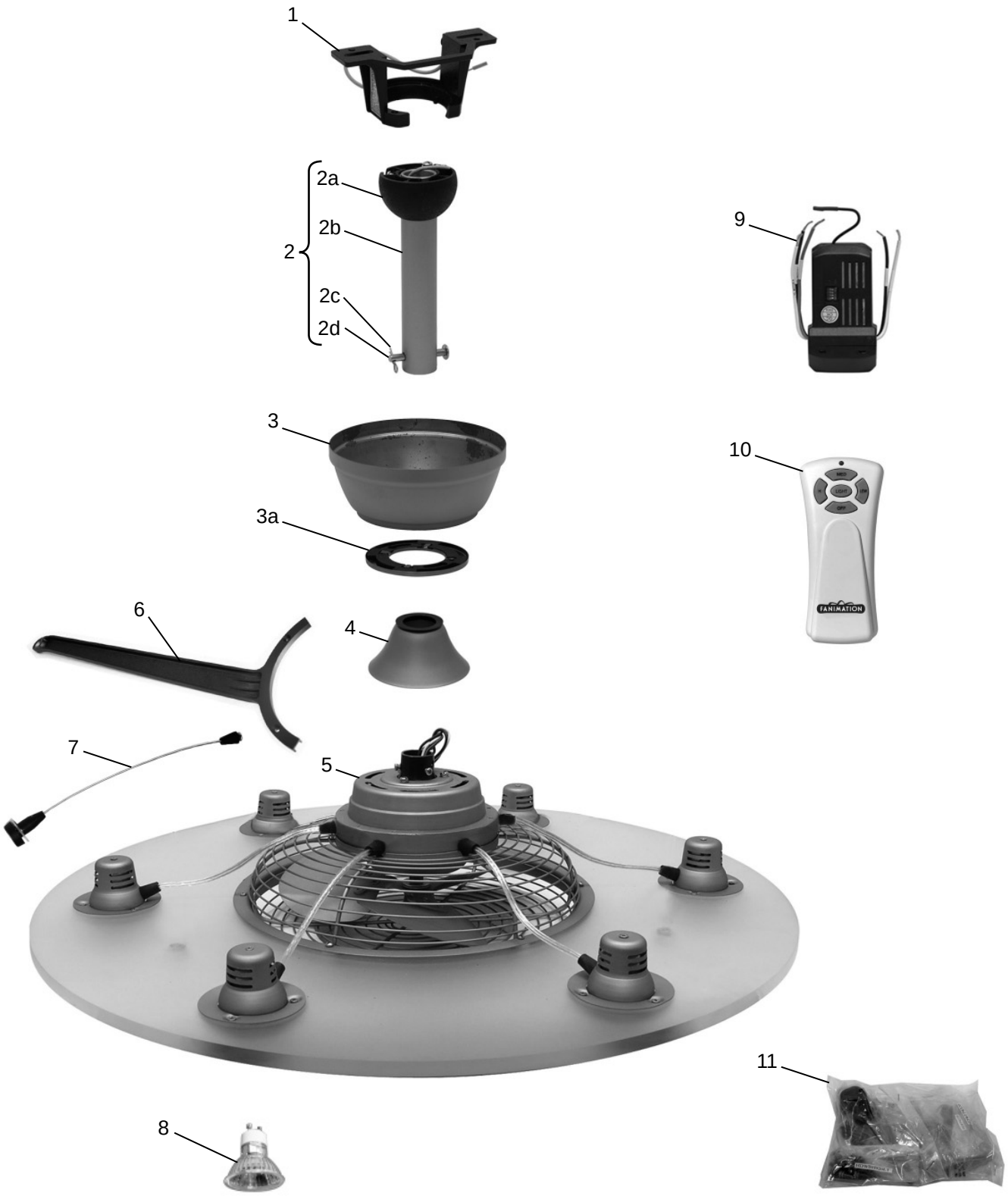

Figure 1

NOTE: *The illustration shown is not to scale or its actual configuration or finish may vary*

10983 Bennett Parkway
Zionsville, IN 46077
Toll Free (888) 567-2055
FAX (866) 482-5215
Outside U.S. call (317) 733-4113
Visit Our Website www.fanimation.com

Copyright 2009 Fanimation